SE366

Total No. of Printed Pages:03

S.E. (Electronics & TC / Electronics & Comm Engg) (Semester- III)
(Revised Course 2007-08) EXAMINATION Nov/Dec 2019
Electronics Devices & Circuits

[Duration : Three Hours] **[Total Marks : 100]**

Instructions:

1. All symbols and abbreviations carry their usual meaning.
2. Draw near sketches / circuits diagrams wherever necessary.
3. Answer any five questions, with a minimum of one question per module.
4. Assume the mains voltages and frequency is given by 230 V ac, 50 Hz.
5. Make suitable assumptions wherever necessary.

MODULE- I

Q.1 a) i) With the help of neat sketches and waveforms, explain the operation of a LC filter. **(8)**
ii) Design a LC filter (for a FWR) to provide 9 V at 100 mA with a maximum ripple of 1% and compute the values of i) L ii) C, iii) critical inductance.

b) For the circuit shown, derive an expression for the following: **(8)**
(i) Input impedance, (ii) Voltage gain,
(iii) Output impedance, (iv) Current gain, (use r_e model)

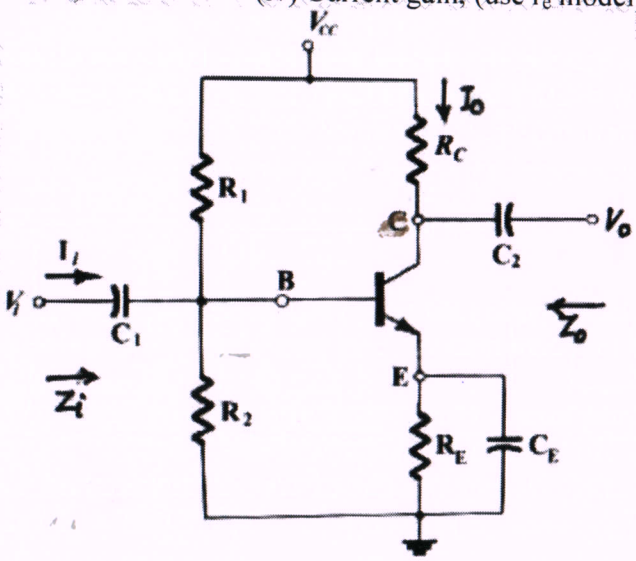

c) Derive the expression for approximate ripple factor for a C filter. **(4 marks)**

Q.2a) Drive an expression for the overall voltage gain for the direct coupled amplifier shown below. **(8 marks)**

F08749487D39F86420B23A89D6F4AAD0

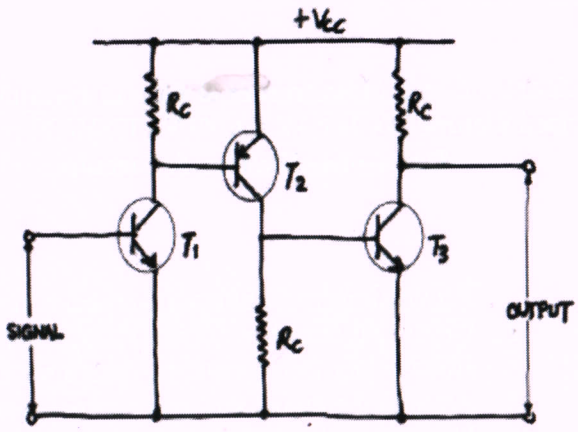

b) **(6 marks)**

c) What are class B amplifiers? With the help of a circuit diagram, explain operation of a class B amplifier. **(6 marks)**

Discuss the importance of Darlington configuration. Derive an expression for the gain of a Darlington configuration.

MODULE- II

Q.3a) What is an integrator? With relevant waveforms, explain the operation. Derive necessary equations. State the condition a low- pass RC circuit to function as an integrating circuit. **(8)**

b) For the circuit shown in figure below, the following pulse inputs are applied: i) $V_i = 10V$, pulse width = 1 ms, ii) $V_i = 20V$, pulse width = 1 ms. Sketch the output waveform and calculate the level of output voltage V_o the end of each pulse. **(4)**

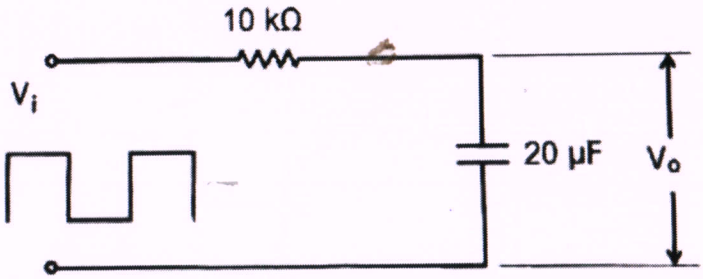

(8)

c) With the help of a neat diagram explain the transistor switching times. State the reasons for delay in switching ON.

Q.4a) With neat diagrams explain the operation of a FET series sampling gate. Mention the applications of a sampling gate. **(6)**

b) Design an astable BJT multivibrator to generate a 1 kHz square wave. Vcc=5V and output load current is to be 20μA. Assume $h_{FEmin} = 70$. Draw the circuit. State some applications of Astable Multivibrators. **(6)**

(4+4=8)

F08749487D39F86420B23A89D6F4AAD0

c) Write a short note on **any two** of the following:
i) Sample and Hold circuit
ii) UJT
iii) BJT Schmitt trigger

MODULE- III

Q.5a) "Negative feedback in amplifiers reduces noise and nonlinear distortion". Explain. **(7)**

b) With the help of suitable mathematical analysis and a neat schematic for a current series feedback configuration, derive an expression for the following: **(8)**
i) Input impedance with feedback
ii) Output impedance with feedback.

c) Draw a block diagram of basic feedback amplifier and identify and explain each block. **(5)**

Q.6a) Draw a neat circuit diagram and explain the operation of Wein bridge oscillator. **(5)**

b) What is piezoelectric effect? Draw circuit diagrams of **(10)**
i) A series – operated crystal oscillator
ii) A shunt – excited crystal oscillator and explain the operation.

c) Write a short note on Hartley oscillator and state how it differs from Colpitt oscillator. **(5)**

MODULE-IV

Q.7a) Describe the formation of PN, junction in a diode and explain with relevant plots for space charge, electric field, voltage with respect to space charge width. **(8)**

b) Explain drift and diffusion current with relevant diagrams and equations. **(4)**

c) State and explain mass action law. **(4)**

b) In a P- type semiconductor, Fermi level is 0.3eV abve the valence band at room temperature of 300K. Determine the new position of Fermi level for temperature of 400K. **(4)**

Q.8a) Find the conductivity of Silicon (a) In intrinsic condition at a room temp 300^oK (b) With donor impurity of 1 in 10^8 (c) With acceptor impurity of 1 in 5×10^7 and (d) with both the impurities present simultaneously. Given that n_i for Si at 300^oK is 1.5×10^{10} cm^{-3} $\mu_n = 1300\ cm^2/V-s$ and $\mu_p = 500\ cm^2/V-s$, number of Si atoms per $cm^3 = 5 \times 10^{22}$. **(6)**

b) What are superconductors? Explain the Meissner effect in Superconductors. **(6)**

c) Write short notes on **(any two):** **(4+4=8)**
i) applications of nanotechnology
ii) MEMS: Materials and applications
iii) Josephson semiconductor

F08749487D39F86420B23A89D6F4AAD0