Total No. of Printed Pages:04

S.E.(Electronics & TC/Electronics & Comm Engg) (Semester- III)
(Revised Course 2007-08) EXAMINATION Nov/Dec 2019
Network Analysis & Synthesis

[Duration : Three Hours] **[Total Marks : 100]**

Instructions:
1. Attempt **any five** questions, choosing at least **one** from **each Module**.
2. **Assume** suitable data, **if necessary**.

MODULE -1

Q.1 a) Distinguish between **4**
i) Distributed and lumped networks
ii) Passive and active networks.

b) Determine the mesh current I_1 in the circuit shown below. **6**

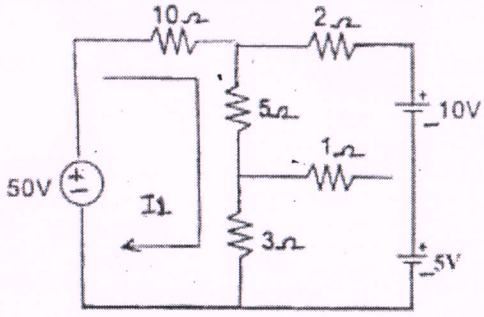

c) Determine the Thevenin's equivalent circuit across 'AB' for the circuit given below. **6**

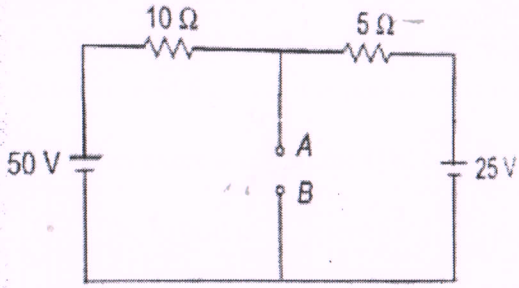

d) State and explain Millman's theorem. **4**

Q.2 a) State the reciprocity theorem. Verify the reciprocity theorem in the circuit shown below. **8**

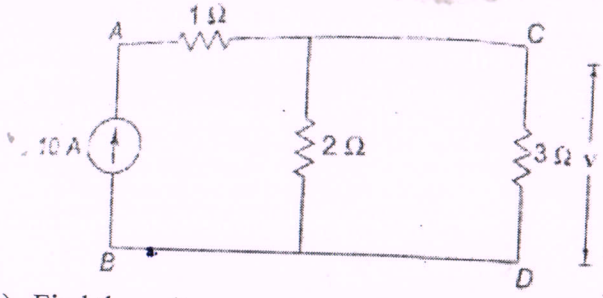

b) Find the voltage across the 2Ω resistor by using the superposition theorem. **8**

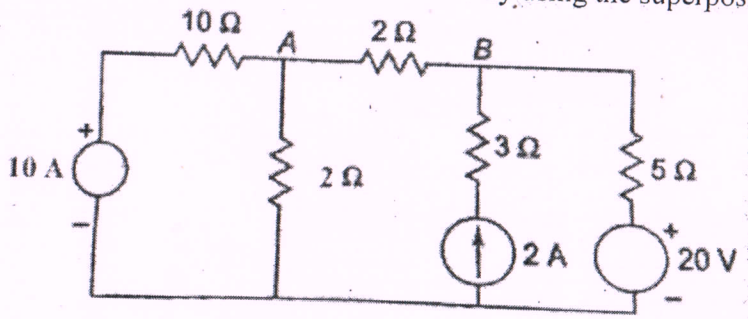

c) State and explain the compensation theorem. **4**

MODULE-II

Q.3 a) State the properties of Incidence Matrix. **5**

b) State and explain the concept of 'Dual Networks'. What are the steps involved in finding the dual of the network? Draw the dual of the following network. **8**

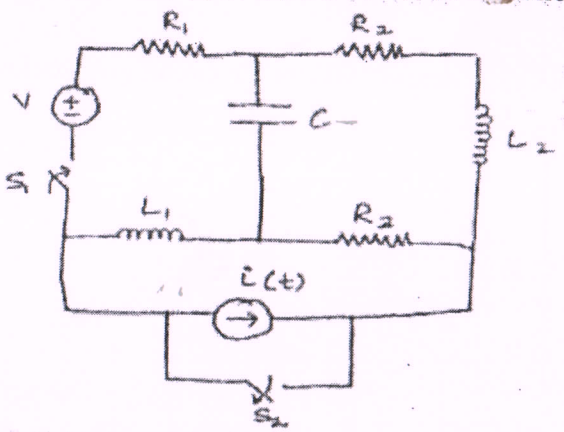

c) A series RC circuit is suddenly excited by a step voltage. Derive an expression for the current as a function of time and draw the graph of current v/s/ time. **7**

Q.4 a) With a neat sketch, define the following with reference to a network graph. **5**

i) Path
ii) Branch
iii) Node
iv) Loop
v) Tree

b) For the circuit shown, determine the complete response i(t) when the switch S is closed at t = 0, i(0)=0. **10**

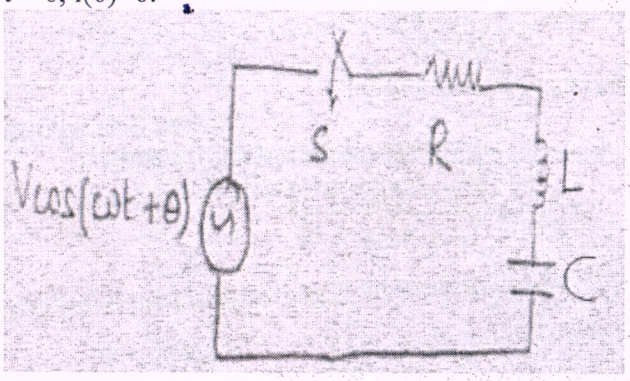

c) Determine the current $i_2(t)$ when the switch 'k' is opened at time t=0. **5**

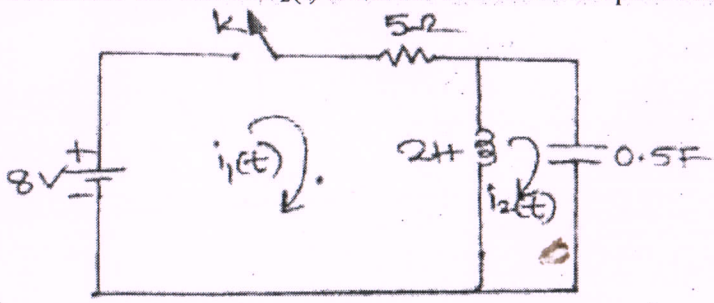

MODULE-III

Q.5 a) Derive the expression for the resonant frequency of a parallel RLC circuit. Also show the impedance of the circuit is purely resistive at all frequencies for the same circuit. **7**

b) Derive an expression for the BW of a series resonance circuit in terms of circuit parameters. **6**

c) Derive the hybrid parameters for a two port network in terms of inverse hybrid parameters. **7**

Q.6 a) Distinguish between series and parallel RLC resonance circuits. **4**

b) Derive the input impedance and the output impedance of transmission parameters. **7**

c) Derive the short- circuit admittance parameters of the two port network. Also derive the condition for reciprocity and symmetry for the same. **9**

MODULE – IV

Q.7 a) Derive the design equations of the lattice attenuator. **8**

b) Draw the reactance curves of a constant- K high pass filter and derive the expression for the cut-off frequency. **7**

c) Write a short note on Elliptic approximation. **5**

Q.8 a) Derive the design equations of Bridged – T attenuator. **8**

b) State and explain any three properties of R- L functions. **6**

c) Obtain the first Foster from and draw the circuit for the following function. **6**

$$Z(s) = \frac{2(s+2)(s+5)}{(s+4)(s+6)}$$